REFERENCE PROJECT NUMBER	FISCAL YEAR	SHEET NUMBER

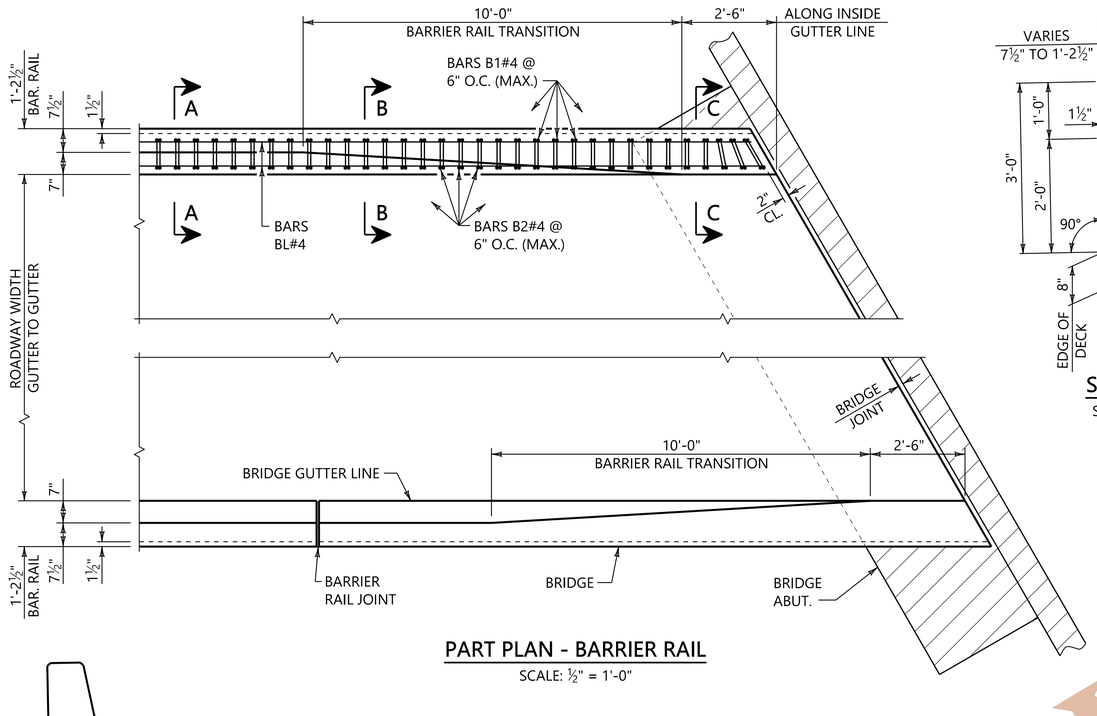

PART PLAN - BARRIER RAIL

SCALE: ½" = 1'-0"

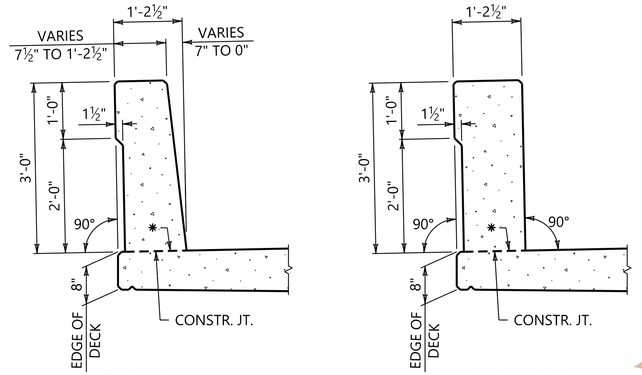

SECTION B-B

SCALE: ¾" = 1'-0"

SECTION C-C

SCALE: ¾" = 1'-0"

SEE SECTION A-A FOR REINFORCEMENT DETAILS.

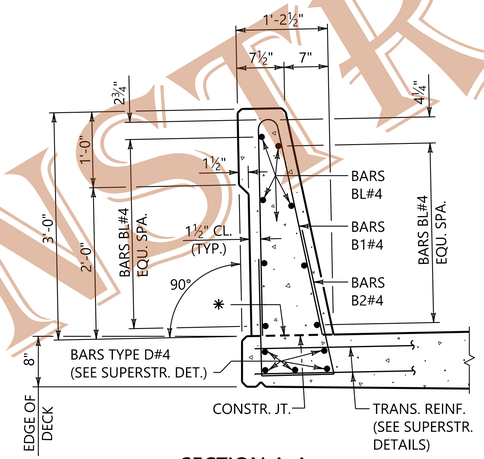

SECTION A-A

SCALE: 1" = 1'-0"

✱ MATCH SLOPE SHOWN ON TYPICAL BRIDGE CROSS SECTION OF CONTRACT PLANS.

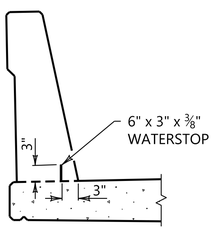

SECTION D-D

(WATERSTOP)

SCALE: ¾" = 1'-0"

NOTES:

BARRIER REINFORCEMENT

1. FAN BARS B1 AND B2 AT SKEWED JOINTS AS REQ'D. TO FIT SKEW. LENGTHS OF BARS BL#4 SHALL BE THE RESPONSIBILITY OF THE CONTRACTOR. THE CONTRACTOR MAY, AT HIS OPTION, PLACE BARS BL CONTINOUSLY AND CUT AT JOINT LOCATIONS. TWO INCH (2") END COVER SHALL BE PROVIDED AT ALL JOINT LOCATIONS. SPLICE BARS BL#4 30 DIA. (MIN.). MINIMUM LENGTH OF BARS BL 10'-0".

YEAR OF COMPLETION

2. THE YEAR OF COMPLETION OF BRIDGE SHALL BE CONSTRUCTED ON THE INSIDE FACE OF BARRIER RAIL AT BEGIN AND END, AS SHOWN. NUMERALS SHALL BE OF A STANDARD ARIAL FONT, SIX INCH (6") TALL WITH AN APPROXIMATE ¾" TO 1" THICKNESS.
3. NUMERALS MAY BE CONSTRUCTED OF A SUITABLE MATERIAL AND ATTACHED TO FORMS IN ORDER TO CAST THREE-EIGHTHS INCH (⅜") DEEP INDENTATIONS IN CONCRETE. EDGES OF NUMERALS SHOULD HAVE AN INWARD BEVEL TO FACILITATE REMOVAL OF FORMS.
4. UPON APPROVAL OF THE ENGINEER, THE CONTRACTOR MAY USE PREFORMED, BLACK THREE-EIGHTHS INCH (⅜") MINIMUM DEPTH NUMERALS THAT ARE PERMANENTLY EMBEDDED WITHIN THE BARRIER RAIL SO THE FACE OF THE NUMERALS ARE FLUSH WITH THE CONCRETE FACE. EDGES OF NUMERALS TO HAVE AN OUTWARD BEVEL TO ENSURE PERMANENT EMBEDMENT.
5. COST OF NUMERALS SHALL BE INCLUDED IN THE PAY ITEM 510J, BRIDGE BARRIER RAIL, TYPE 36" SINGLE SLOPE.

OPEN JOINTS IN BARRIER

6. IN ADDITION TO THE OPEN JOINTS SHOWN ON THE BRIDGE DRAWINGS AT THE BEGINNING AND END OF SPANS, OPEN JOINTS IN BARRIER RAILS SHALL BE LOCATED AS FOLLOWS: FOR SPANS UP TO 60 FEET IN LENGTH, PROVIDE ONE OPEN JOINT AT MID-POINT OF THE SPAN. FOR SPANS EXCEEDING 60 FEET IN LENGTH, PROVIDE ONE OPEN JOINT AT MID-POINT OF THE SPAN AND ADDITIONAL JOINTS AT EQUAL SPACES NOT TO EXCEED 30 FEET BETWEEN JOINTS.
7. FOR CONTINUOUS SPAN UNITS, OPEN JOINTS IN BARRIER RAILS SHALL ALSO BE PROVIDED AT INTERIOR BENT LOCATIONS.
8. JOINT OPENINGS SHALL BE THREE-QUARTERS INCH (¾") IN WIDTH WHENEVER BARRIER RAILS ARE CONSTRUCTED BY MEANS OTHER THAN A SLIP FORM EXTRUSION MACHINE.

WATERSTOPS

9. OPEN JOINTS IN BARRIER RAIL TO BE SEALED WITH A 6" x 3" x ⅜" WATERSTOP, EXCEPT AS NOTED BELOW. WATERSTOP MATERIAL SHALL CONFORM TO REQUIREMENTS OF SUB-ARTICLE 832.05(b) OF THE STANDARD SPECIFICATIONS. WATERSTOP SHALL BE BONDED TO BRIDGE DECK WITH AN APPROVED ADHESIVE MEETING REQUIREMENTS OF SUB-ARTICLE 832.03(a)2b OF THE STANDARD SPECIFICATIONS.
10. WATERSTOP NOT REQUIRED ON HIGH SIDE OF SLOPED DECKS, WHEN CLASS 3 SURFACE FINISH IS REQUIRED, OR WHEN JOINT OPENING IS SAW CUT PER SUB-ARTICLE 510.03(c)6j OF THE STANDARD SPECIFICATIONS.
11. COST OF WATERSTOPS SHALL BE INCLUDED IN PAY ITEM 510J, BRIDGE BARRIER RAIL, TYPE 36" SINGLE SLOPE.

DRAIN BLOCKOUTS

12. DRAIN BLOCKOUTS ARE TO BE USED ONLY WHEN SPECIFIED ON THE CONTRACT PLANS. OMIT DRAINS OVER TRAFFIC LANES, UNPROTECTED SLOPE FILLS, HIGH SIDE IF SUPER-ELEVATED AND WITHIN 10'-0" OF BRIDGE ENDS. NO BLOCKOUT SHALL BE PLACED WITHIN 3'-0" OF AN OPEN JOINT IN THE BARRIER RAIL. SPACE BLOCKOUTS @ 5'-0" O.C. (MAX.) UNLESS SHOWN OTHERWISE ON THE CONTRACT PLANS.

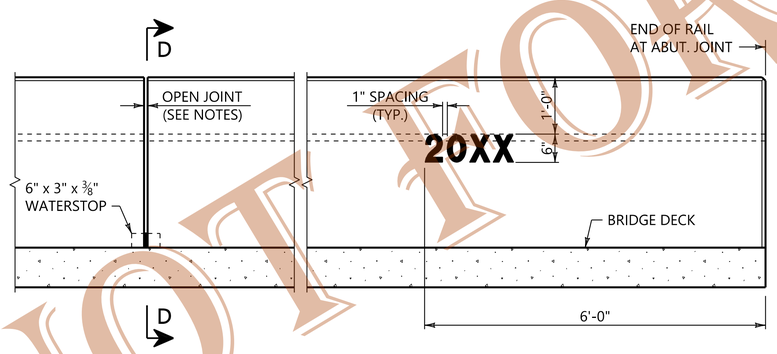

PART ELEVATION - BARRIER RAIL

SCALE: ¾" = 1'-0"

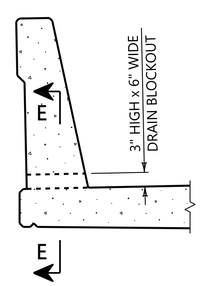

DRAIN BLOCKOUT

SCALE: ¾" = 1'-0"

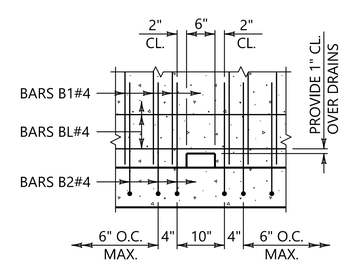

SECTION E-E

SCALE: ¾" = 1'-0"

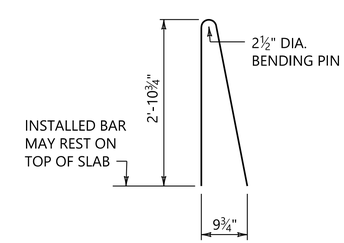

BARS B1#4

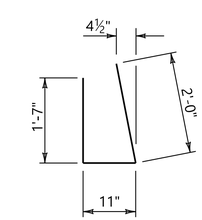

BARS B2#4

END TRANSITIONS TO BE INCLUDED IN THE LINEAR FOOT QUANTITY FOR PAY ITEM 510J, BRIDGE BARRIER RAIL, TYPE 36" SINGLE SLOPE.

ASSISTANT BRIDGE ENGINEER	BRIDGE ENGINEER
1/30/25 DATE	1/30/25 DATE

ALABAMA DEPARTMENT OF TRANSPORTATION

ALDOT ORIGINAL CONTRACT DRAWINGS BRIDGE BUREAU

REVISIONS

REVISED NOTE 12. JNW 1/30/25

THIS BRIDGE SPECIAL PROJECT DRAWING FOR USE ONLY ON:
PROJECT NO. _____
COUNTY(S) _____

THESE DRAWINGS REPRESENT DESIGNS PREPARED FOR USE BY THE ALABAMA DEPARTMENT OF TRANSPORTATION AND ARE NOT TO BE COPIED, REPRODUCED, ALTERED, OR USED BY ANYONE, OR ANY ORGANIZATION, WITHOUT THE EXPRESSED WRITTEN CONSENT OF THE ALABAMA DEPARTMENT OF TRANSPORTATION REPRESENTATIVE AUTHORIZED TO APPROVE SUCH USE. ANYONE MAKING UNAUTHORIZED USE OF THESE DRAWINGS MAY BE PROSECUTED TO THE FULLEST EXTENT OF THE LAW.

BRIDGE BARRIER RAIL w/ END TRANSITIONS (36" SINGLE SLOPE)

BRIDGE SPECIAL PROJECT DRAWING

BBR-2

SHEET 1 OF 1

NOT FOR CONSTRUCTION

\\brvms002\BridgeStandardsSpecial\Bridge Special DGN Files\2025 DGN\1 Standard Notes & Details\BBR-2 Bridge Barrier Rail 2.dgn
PLOTTED: 30-Jan-25 at 11:15